Quiz 9 Solution
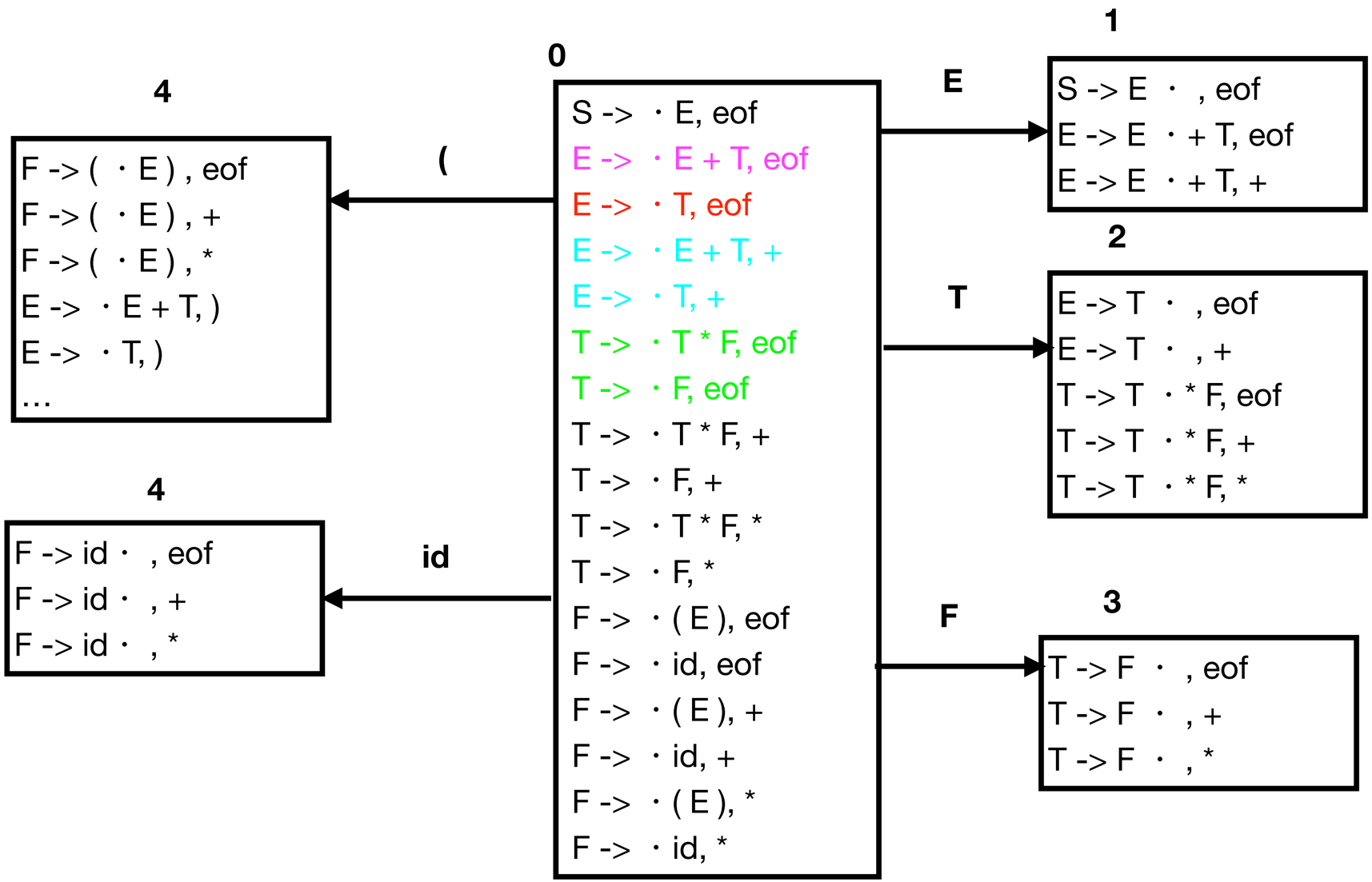
Quiz 9 Solution